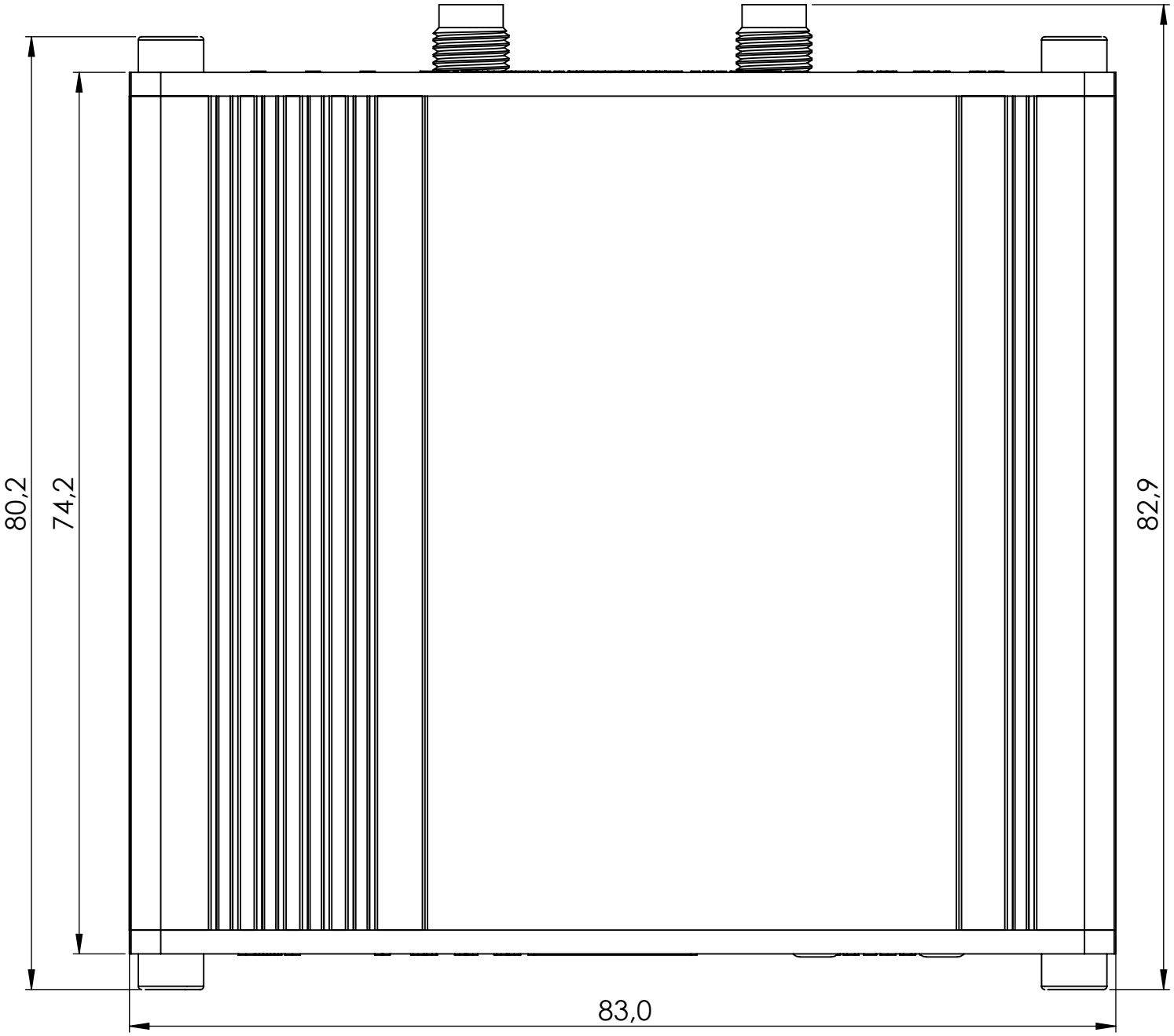

Top view

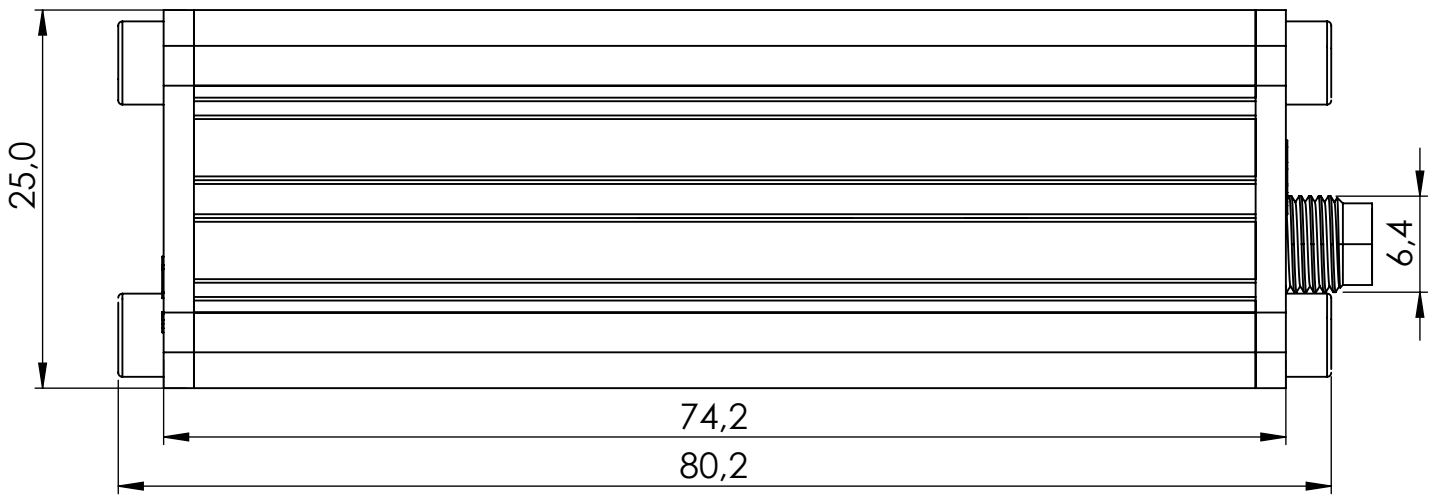

Right view

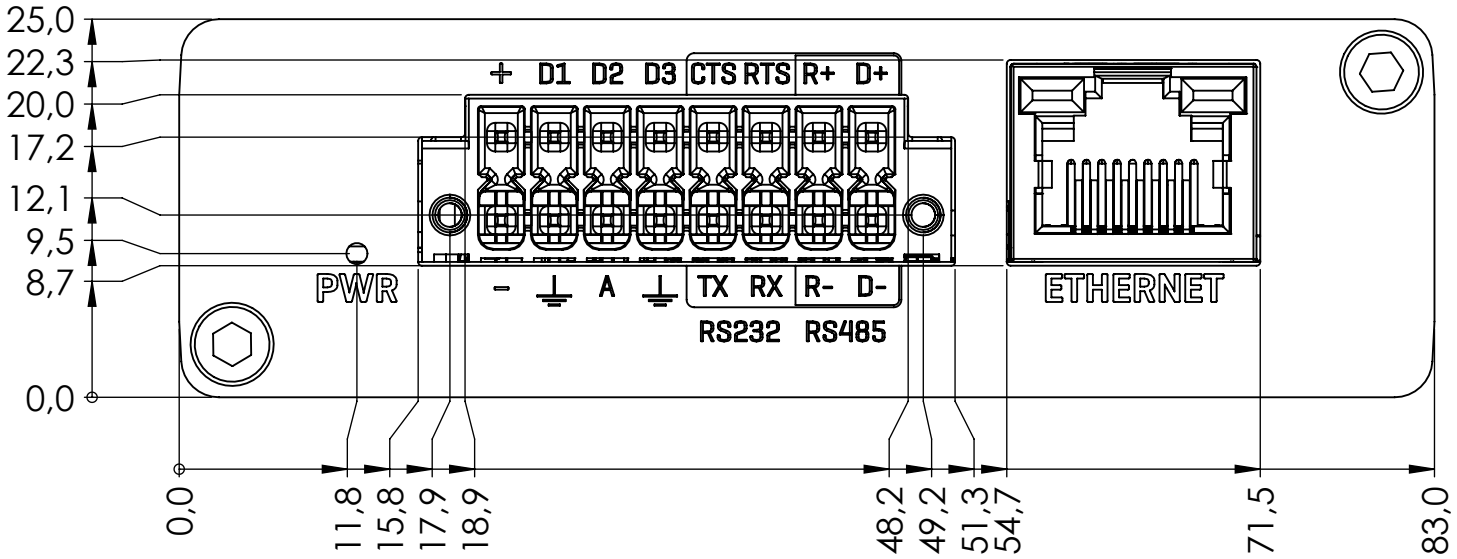

Front view

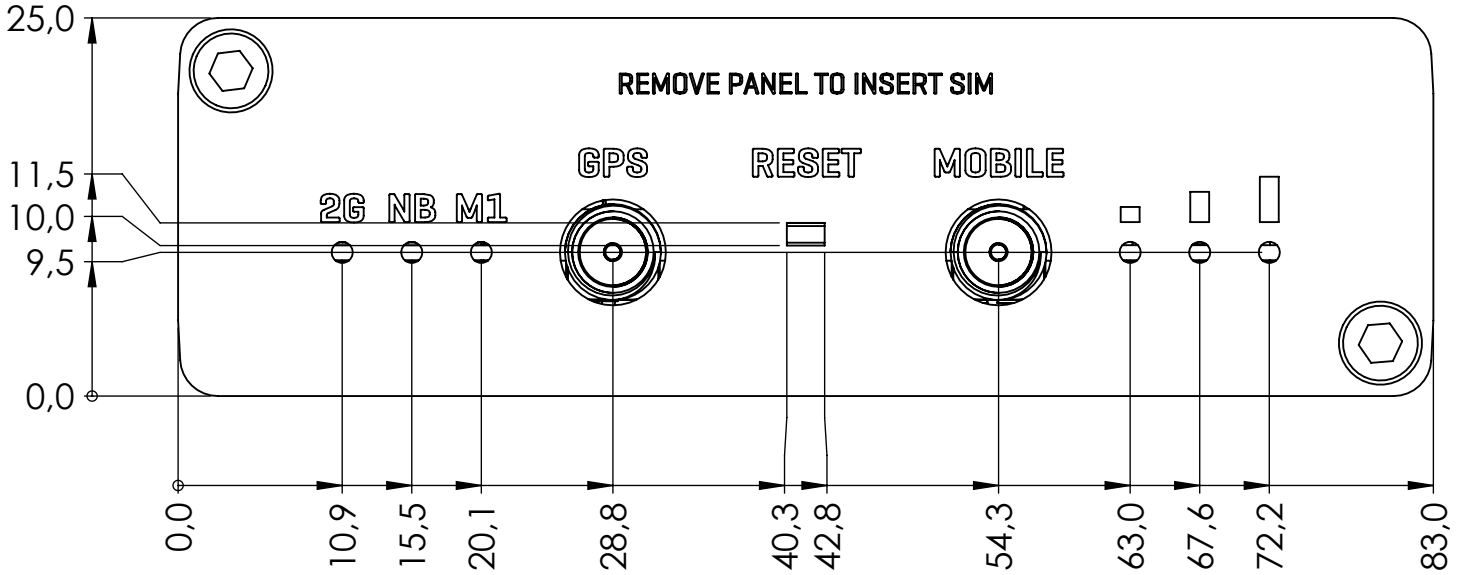

Rear view

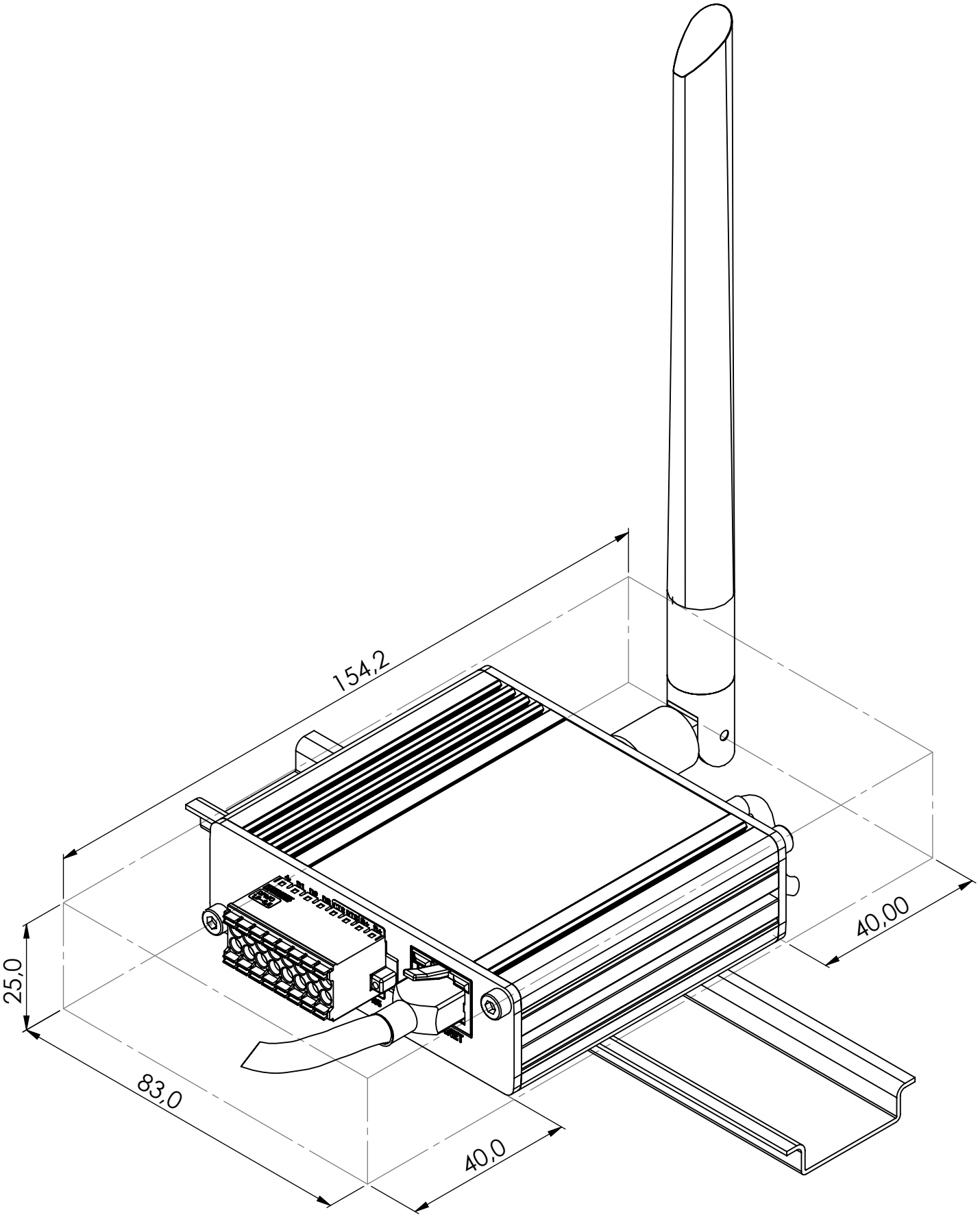

Mounting space requirements

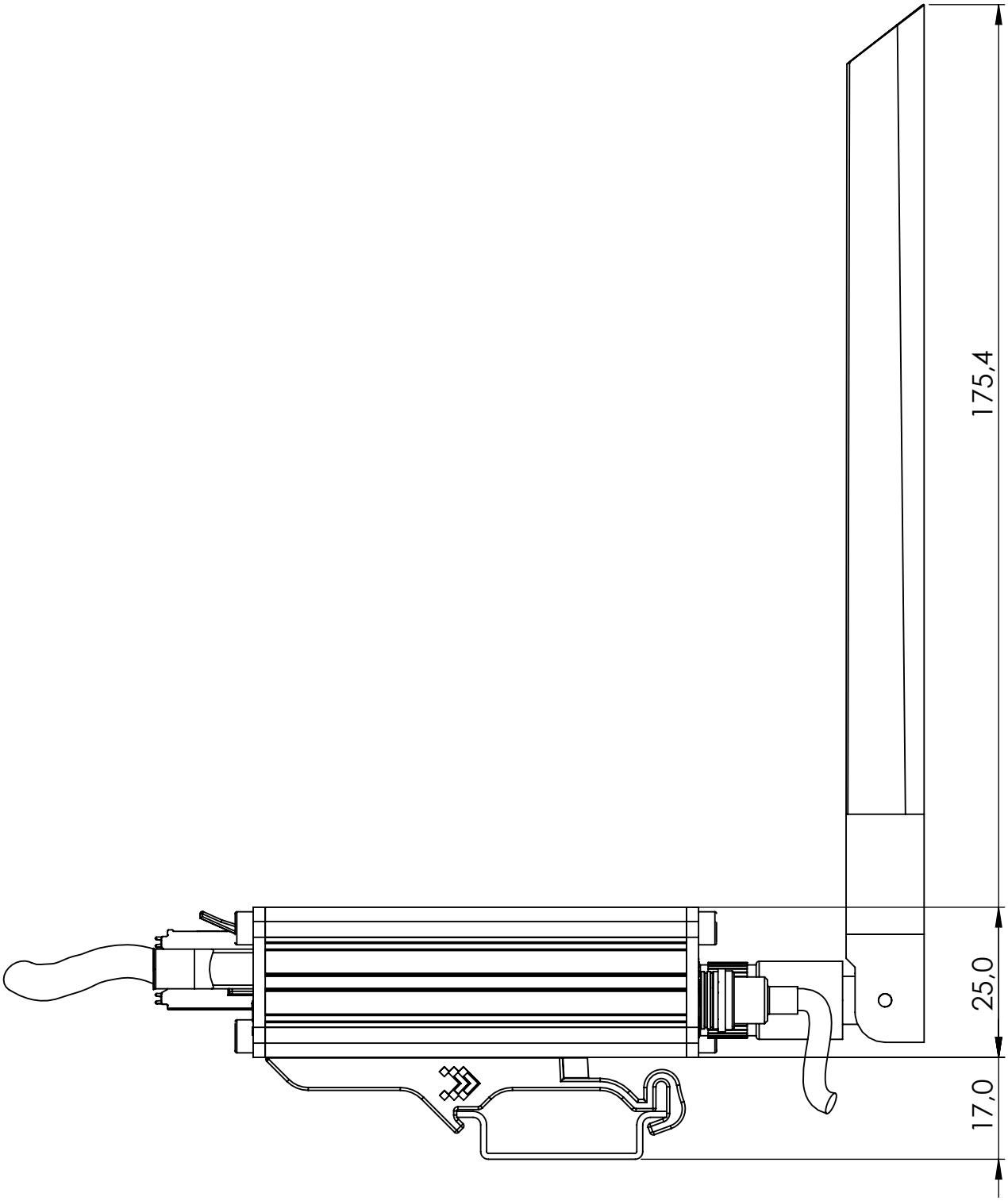

Mounting space requirements